AIRMAX

EXPERT OF VENTILATION SOLUTION

Controlled by BELIMO®

VAV TERMINAL UNIT

TBVAV–S–T100 SINGLE DUCT TERMINAL UNIT (BASE)

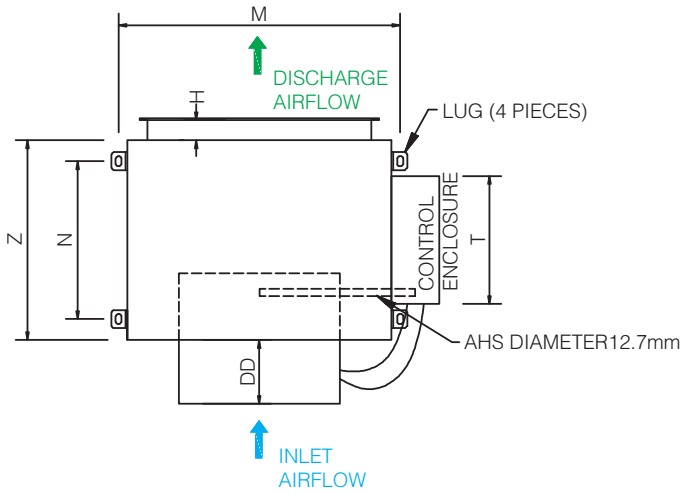

TOP VIEW

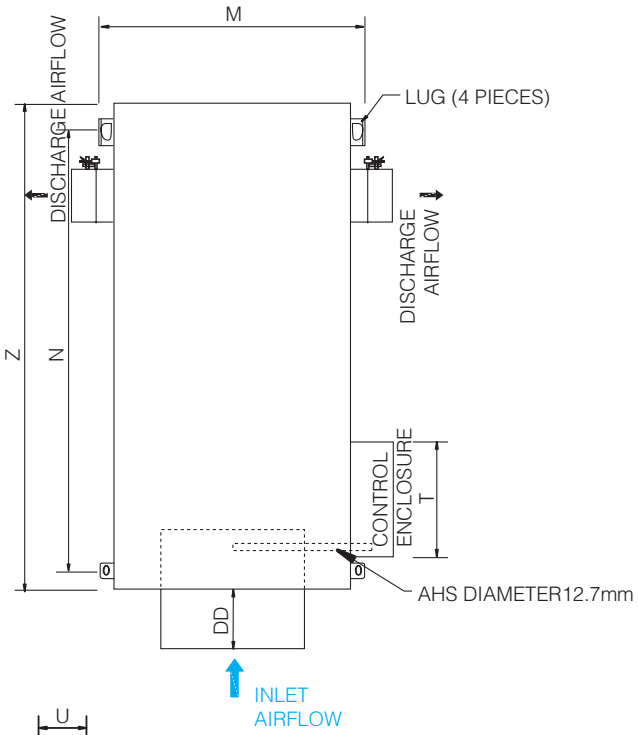

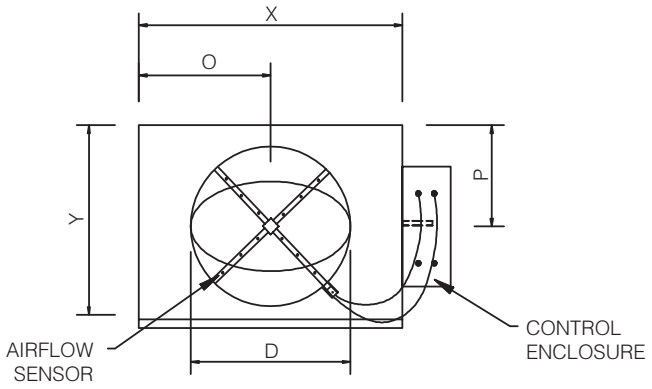

INLET VIEW

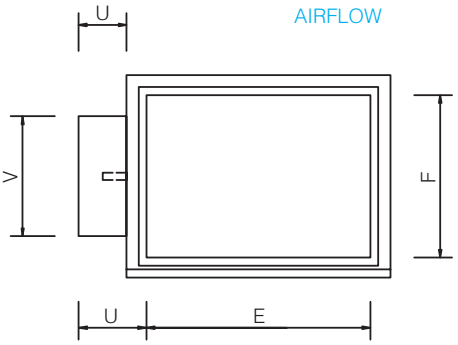

BOTTOM VIEW

DIMENSIONAL DETAILS

UNIT:mm

Type	Primary Airflow		DD	Box			Inlet	Discharge Outlet		O	P	Lug		H	Control Enclosure		
	Min (CMH)	Max (CMH)		X	Y	Z	D	E	F			M	N		T	U	V
TBVAV–S–T100–05	102	612	160	270	280	400/910	125	220	230	135	140	310	327	45	460	120	250
TBVAV–S–T100–06	153	880	160	270	280	400/910	150	220	230	135	140	310	327	45	460	120	250
TBVAV–S–T100–07	204	1190	160	320	280	400/910	175	270	230	160	140	360	327	45	460	120	250
TBVAV–S–T100–08	272	1560	160	320	280	400/910	200	270	230	160	140	360	327	45	460	120	250
TBVAV–S–T100–09	374	1972	160	370	330	400/1200	225	320	280	185	165	410	327	45	460	120	250
TBVAV–S–T100–10	425	2430	160	370	330	400/1200	250	320	280	185	165	410	327	45	460	120	250
TBVAV–S–T100–12	612	3500	160	420	380	450/1200	300	370	330	210	190	460	377	45	460	120	250
TBVAV–S–T100–14	816	4760	160	470	430	500/1500	350	420	380	235	215	510	427	45	460	120	250
TBVAV–S–T100–16	1071	6232	160	520	480	500/1500	400	470	430	260	240	560	427	45	460	120	250

TBVAV–S–T100 SINGLE DUCT TERMINAL UNIT (WATER COIL)

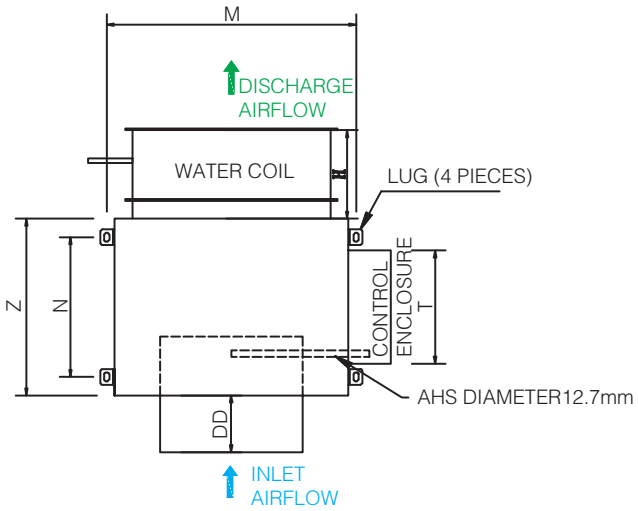

TOP VIEW

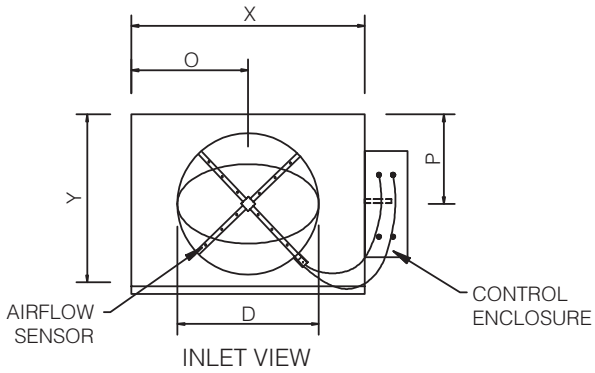

INLET VIEW

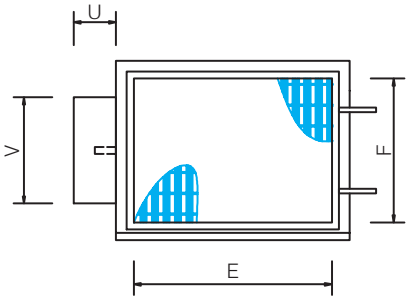

BOTTOM VIEW

DIMENSIONAL DETAILS

UNIT:mm

Type	Primary Airflow		DD	Box			Inlet	Discharge Outlet		O	P	Lug		H	Control Enclosure		
	Min (CMH)	Max (CMH)		X	Y	Z	D	E	F			M	N		T	U	V
TBVAV–S–T100–05	102	612	160	270	280	400/910	125	220	230	135	140	310	327	45	460	120	250
TBVAV–S–T100–06	153	880	160	270	280	400/910	150	220	230	135	140	310	327	45	460	120	250
TBVAV–S–T100–07	204	1190	160	320	280	400/910	175	270	230	160	140	360	327	45	460	120	250
TBVAV–S–T100–08	272	1560	160	320	280	400/910	200	270	230	160	140	360	327	45	460	120	250
TBVAV–S–T100–09	374	1972	160	370	330	400/1200	225	320	280	185	165	410	327	45	460	120	250
TBVAV–S–T100–10	425	2430	160	370	330	400/1200	250	320	280	185	165	410	327	45	460	120	250
TBVAV–S–T100–12	612	3500	160	420	380	450/1200	300	370	330	210	190	460	377	45	460	120	250
TBVAV–S–T100–14	816	4760	160	470	430	500/1500	350	420	380	235	215	510	427	45	460	120	250
TBVAV–S–T100–16	1071	6232	160	520	480	500/1500	400	470	430	260	240	560	427	45	460	120	250

TERMINAL UNIT SELECTION DATA SHEET

Inlet Size	Air Flow		Basic Unit		With Atten		Min. △ ptbose Unit		Discharge NC Assembly △ ps, Across Unit			Discharge NC Assembly 914mm △ ps, Across Unit			Radiated NC Basic Assembly △ ps, Across Unit		
									0.5"W.G	1.5"W.G	3"W.G	0.5"W.G	1.5"W.G	3"W.G	0.5"W.G	1.5"W.G	3"W.G
in	CMH	CFM	*W.G	Pa	*W.G	Pa	*W.G	Pa	125Pa	375Pa	750Pa	125Pa	375Pa	750Pa	125Pa	375Pa	750Pa
05	102	60	0.01	2	0.01	2	0.06	15	–	–	–	–	–	–	–	–	–
	230	140	0.01	2	0.01	2	0.14	35	–	–	–	–	–	–	–	–	21
	425	250	0.01	2	0.01	2	0.25	62	–	–	24	–	–	–	20	24	27
	612	360	0.01	2	0.01	2	0.39	97	–	22	26	–	–	22	25	28	31
06	153	90	0.02	5	0.02	5	0.05	12	–	–	–	–	–	–	–	–	–
	381	225	0.05	11	0.05	11	0.12	30	–	–	21	–	–	–	–	–	21
	511	300	0.08	20	0.08	20	0.21	52	–	–	24	–	–	–	–	20	25
	637	375	0.13	31	0.13	31	0.33	82	–	21	27	–	–	22	–	23	27
	880	517	0.18	45	0.18	45	0.46	114	–	24	30	–	–	25	–	25	29
07	204	120	0.03	7	0.03	7	0.12	30	–	–	26	–	–	–	–	–	23
	561	330	0.05	12	0.05	12	0.20	50	–	23	29	–	–	21	–	22	26
	935	550	0.07	18	0.07	18	0.29	22	–	25	32	–	–	24	–	24	28
	1190	700	0.10	26	0.1	26	0.41	102	–	27	34	–	22	27	22	27	29
08	272	160	0.01	2	0.01	2	0.07	17	–	–	25	–	–	–	–	21	25
	849	500	0.01	2	0.01	2	0.10	25	–	20	28	–	–	–	–	23	28
	1018	600	0.01	2	0.01	2	0.15	37	–	23	30	–	–	22	–	26	30
	1188	700	0.01	2	0.01	2	0.20	50	–	24	32	–	–	24	20	27	32
	1560	920	0.01	2	0.01	2	0.25	62	–	25	32	–	–	24	22	29	33
09	374	220	0.01	2	0.01	2	0.06	15	–	22	31	–	–	22	–	–	25
	935	550	0.01	2	0.01	2	0.12	30	–	25	34	–	–	25	–	–	28
	1530	900	0.01	2	0.01	2	0.2	50	–	25	35	–	–	26	–	22	31
	1972	16	0.01	2	0.01	2	0.3	75	–	27	36	–	21	27	–	24	37
10	425	250	0.01	2	0.01	2	0.06	15	–	–	27	–	–	21	–	–	25
	1274	750	0.01	2	0.01	2	0.10	25	–	20	28/	–	–	22	–	–	27
	1612	950	0.01	2	0.01	2	0.15	37	–	22	30	–	–	24	–	22	29
	2430	1429	0.01	2	0.01	2	0.29	72	–	25	33	–	20	27	–	25	32
12	612	360	0.01	2	0.01	2	0.07	17	–	23	31	–	–	23	–	21	28
	2037	1200	0.01	2	0.01	2	0.11	27	–	25	32	–	–	26	–	23	30
	2548	1500	0.01	2	0.01	2	0.17	42	–	26	37	–	21	28	–	25	31
	3060	1800	0.01	2	0.01	2	0.24	60	–	27	35	–	23	30	–	26	363
	3500	2060	0.01	2	0.01	2	0.33	82	–	28	35	–	25	31	–	28	34
14	816	480	0.01	2	0.01	2	0.05	12	–	22	31	–	21	29	–	21	28
	2548	1500	0.01	2	0.01	2	0.10	25	–	25	34	–	23	31	–	26	32
	3398	2000	0.01	2	0.01	2	0.18	45	–	27	36	–	24	32	21	29	35
	4248	2500	0.01	2	0.01	2	0.27	67	–	29	38	–	25	34	24	32	37
	4760	2800	0.01	2	0.01	2	0.38	95	–	30	39	–	26	35	27	35	40
16	1071	630	0.01	2	0.01	2	0.06	15	–	22	30	–	20	28	–	23	30
	3398	2000	0.01	2	0.01	2	0.10	25	–	25	33	–	22	30	–	26	33
	4248	2500	0.01	2	0.01	2	0.16	40	–	27	35	–	24	32	22	30	35
	5097	3000	0.01	2	0.01	2	0.22	55	–	29	37	–	26	34	25	33	38
	5947	3500	0.01	2	0.01	2	0.30	75	–	31	40	–	27	35	28	36	41
	6232	3660	0.01	2	0.01	2	0.39	97	20	33	41	20	28	36	31	39	44

Rediated sound is based on a 16mm mineral fiber tile ceiling per ARI 855–998 typical cottenuation values. Discharged sound is based on enviornmetal effect, end reflection, flex duct effect, space effect, soumd Power, division and lined duct effect.

Total Deduction	Octave Band mid Frequency, Hz					
	125	250	500	1000	2000	4000
All size	18	19	20	26	31	36

Total Deduction	Octave Band mid Frequency, Hz					
	125	250	500	1000	2000	4000
<300CFM	24	28	39	53	59	40
300CFM–700CFM	27	29	40	51	53	39
>700CFM	29	30	41	51	52	39

1. Sound Power levels Lw dB re 10^{-12} watts
2. NC–Based on ARI 855–98
3. Dashes (–) indicate NC's less than 20
4. CFM–Cubic feet / minute
5. CMH–Cubic meter / hour
6. pa–Pressnre given in Pascals
7. "W.G.–inches of Water Gauge

TERMINAL UNIT DISCHARGE SOUND POWER LEVEL

Inlet Size	Air Flow		125Pa(0.5"WG)						250Pa(1.0"WG)						500Pa(2.0"WG)						750Pa(3.0"WG)					
			Octave Band						Octave Band						Octave Band						Octave Band					
in	CMH	CFM	2	3	4	5	6	7	2	3	4	5	6	7	2	3	4	5	6	7	2	3	4	5	6	7
05	102	60	48	44	40	38	37	32	51	47	47	43	44	39	54	51	52	49	50	46	56	53	55	51	53	51
	230	140	55	52	46	43	40	35	57	53	52	48	47	42	80	57	57	53	53	50	62	60	59	56	56	54
	425	250	59	57	50	46	42	37	61	58	55	57	49	45	64	62	62	56	55	52	66	64	63	59	59	56
	612	360	62	61	53	49	44	39	65	61	58	54	50	46	67	65	62	59	56	53	69	67	65	61	60	58
06	153	90	47	43	36	37	34	27	51	48	41	42	41	35	55	53	47	48	47	43	57	56	50	51	51	47
	381	225	52	48	41	41	37	30	55	53	47	46	44	38	59	58	52	52	50	45	62	61	56	55	54	50
	511	300	54	52	45	44	39	32	58	57	51	49	46	40	62	62	56	55	52	47	65	65	60	58	56	52
	637	375	57	55	48	46	41	33	61	60	54	52	47	41	65	65	59	57	54	49	67	68	63	61	57	53
	880	517	59	57	51	48	42	35	63	62	56	54	49	42	67	67	62	59	55	50	69	70	65	62	59	54
07	204	120	51	49	41	41	38	34	55	55	48	47	44	41	59	60	55	52	51	48	61	63	59	56	55	52
	561	330	54	53	45	44	40	36	58	58	52	49	46	43	60	64	58	55	53	50	64	67	63	59	57	54
	935	550	59	58	50	47	42	39	62	63	57	53	49	46	66	69	64	59	55	53	68	72	68	62	59	57
	1190	700	60	58	52	49	43	40	64	65	59	54	50	47	67	70	65	60	56	54	70	74	69	64	60	58
08	272	160	53	51	44	42	39	35	57	57	51	48	45	42	61	63	58	54	52	49	64	66	62	57	56	54
	849	500	55	53	46	44	40	36	59	59	53	50	47	43	63	65	60	56	53	51	66	68	64	59	57	55
	1018	600	57	54	48	46	41	37	61	61	55	51	47	44	65	67	62	57	54	52	67	70	66	61	58	56
	1188	700	58	56	50	47	42	38	62	62	57	53	48	45	66	68	64	59	55	53	69	72	68	62	59	57
	1560	920	60	57	51	48	42	39	64	63	58	54	49	46	68	69	65	60	55	53	70	73	70	63	59	58
09	374	220	56	52	45	44	40	37	60	59	54	51	48	45	64	67	62	58	56	53	57	71	67	62	60	57
	935	550	58	54	47	46	42	39	63	61	56	53	50	47	67	69	64	61	57	56	69	74	69	65	62	59
	1530	900	60	55	49	48	43	40	64	63	57	56	51	48	69	71	66	62	58	56	71	75	71	67	63	60
	1972	1160	62	56	50	49	44	41	66	64	58	57	51	49	70	72	67	64	59	57	73	76	72	68	64	61
10	475	250	55	51	48	47	44	40	59	57	55	52	51	48	63	64	61	57	57	55	66	67	65	59	61	59
	1274	750	57	53	50	49	45	41	61	59	57	54	52	49	66	66	63	59	58	56	68	70	67	65	65	61
	1612	950	59	55	52	51	46	42	63	61	58	56	53	50	68	68	65	61	59	57	70	71	69	64	63	62
	1954	1150	61	56	53	52	47	43	65	63	60	57	53	50	69	69	66	62	60	58	72	73	70	65	64	62
	2430	1429	62	57	54	54	47	44	66	64	61	58	54	51	71	70	67	63	60	58	73	74	71	66	64	63
12	612	360	56	55	52	48	44	40	61	62	58	54	51	47	66	68	64	60	57	53	69	72	68	64	61	57
	2037	1200	59	57	53	50	46	42	64	63	60	56	52	48	59	70	66	62	59	55	72	73	70	66	63	59
	2548	1500	61	57	55	51	47	43	67	64	61	57	54	50	72	71	68	64	61	57	75	74	71	67	65	60
	3060	1800	63	58	56	53	48	45	68	65	62	59	55	51	74	71	69	65	62	58	77	75	72	69	66	62
	3500	2060	65	59	57	54	50	46	70	65	63	60	56	52	75	72	70	66	63	59	78	76	73	70	67	63
14	816	480	55	53	48	46	42	38	62	60	54	53	49	45	68	67	60	59	56	51	72	72	63	63	59	55
	2548	1500	59	55	52	49	45	41	63	63	58	55	52	48	72	70	64	62	59	55	75	74	68	66	62	58
	3398	2000	62	57	56	50	48	43	68	65	62	57	54	50	74	72	68	64	61	57	78	76	71	68	65	61
	4248	2500	64	59	58	52	49	45	70	66	64	59	56	52	76	73	70	66	62	59	80	78	74	70	66	63
	4760	2800	65	60	60	53	51	47	71	67	66	60	57	53	78	75	72	67	64	60	82	78	76	71	68	64
16	1071	630	59	53	51	48	45	40	65	60	57	55	52	47	71	67	62	62	59	54	75	71	66	66	63	58
	3398	2000	62	56	55	50	47	42	68	63	60	57	54	49	75	70	66	64	61	56	78	74	69	68	65	60
	4248	2500	64	58	58	51	49	44	71	65	63	58	56	51	77	72	69	65	62	58	81	76	72	69	66	62
	5097	3000	66	59	60	53	50	46	73	66	66	60	57	53	79	73	71	67	64	59	83	77	75	71	68	64
	5948	3500	68	61	62	54	51	47	74	67	68	61	58	54	81	74	73	68	65	61	84	78	77	72	69	65
	6232	3660	70	62	64	55	52	48	76	69	69	62	59	55	82	75	75	59	66	62	86	79	78	73	70	66

1. Sound Power levels Lw dB re 10^{-12} watts
2. NC–Based on ARI 855–98
3. Dashes (–) indicate NC's less than 20
4. CFM–Cubic feet / minute
5. CMH–Cubic meter / hour
6. pa–Pressnre given in Pascals
7. "W.G.–inches of Water Gauge

TERMINAL UNIT DISCHARGE SOUND POWER LEVEL WITH 914MM

Inlet Size	Air Flow		125Pa(0.5"WG)						250Pa(1.0"WG)						500Pa(2.0"WG)						750Pa(3.0"WG)					
			Octave Band						Octave Band						Octave Band						Octave Band					
in	CMH	CFM	2	3	4	5	6	7	2	3	4	5	6	7	2	3	4	5	6	7	2	3	4	5	6	7
05	102	60	48	43	36	28	–	–	48	45	40	32	23	–	51	47	44	57	29	20	52	48	47	39	32	25
	230	140	54	51	41	33	21	–	56	53	46	38	27	–	57	55	50	42	33	24	58	56	53	45	36	28
	425	250	59	56	45	37	24	–	67	58	50	42	30	–	62	60	54	46	36	28	63	61	56	49	39	31
	612	360	62	60	48	40	26	–	63	62	52	44	32	21	65	64	57	49	38	28	66	65	59	52	41	32
06	153	90	47	40	37	28	–	–	50	45	42	33	25	–	53	49	47	38	31	23	55	52	50	41	35	27
	381	225	51	46	41	32	21	–	54	50	46	37	27	–	57	54	51	42	33	25	59	57	54	45	37	29
	511	300	54	49	44	35	22	–	57	54	49	40	29	–	60	58	54	45	35	27	62	61	57	48	39	31
	637	375	56	52	47	37	23	–	59	56	52	42	30	20	62	61	57	47	36	28	64	63	60	50	40	33
	880	517	58	54	49	39	25	–	61	59	54	44	31	22	64	63	59	49	37	29	66	66	62	52	41	34
07	204	120	48	44	37	31	20	–	52	48	43	36	27	25	55	53	50	41	33	32	57	56	54	44	37	37
	561	330	52	48	41	35	23	–	56	53	48	40	29	26	59	57	54	45	36	34	61	59	58	48	39	38
	935	550	58	54	47	40	26	21	61	59	53	46	33	28	64	63	60	51	39	35	66	65	63	54	43	39
	1190	700	60	56	49	42	27	21	63	61	55	48	34	29	66	65	62	53	40	36	58	68	65	56	44	40
08	272	160	52	47	41	35	26	–	55	52	48	41	32	25	59	56	54	46	38	32	61	59	58	49	42	36
	849	500	54	50	43	38	27	–	58	54	50	43	33	27	61	59	56	48	40	34	63	61	60	51	43	38
	1018	600	56	52	45	39	28	21	59	56	51	44	35	28	63	61	57	50	41	35	65	63	61	53	44	39
	1188	700	57	53	46	41	29	22	61	58	52	46	36	29	64	62	59	51	42	36	66	65	62	54	45	40
	1560	920	58	55	47	42	30	23	62	59	54	47	36	30	66	64	60	52	43	37	68	66	64	55	46	41
09	374	220	54	49	45	38	29	25	58	54	51	43	36	32	61	60	58	48	42	40	64	64	62	51	46	44
	935	550	57	51	47	41	31	27	60	57	53	46	38	34	64	63	60	51	44	41	66	66	64	54	48	46
	1530	900	59	53	48	44	33	28	62	59	55	49	39	36	66	64	62	54	46	43	68	88	66	57	49	47
	1972	1160	60	54	50	46	34	29	64	60	56	51	40	37	67	66	63	56	57	44	70	68	67	58	51	48
10	475	250	53	47	45	38	30	30	57	53	51	43	37	33	61	59	58	49	43	35	64	62	61	52	47	37
	1274	750	56	49	47	41	32	32	60	55	53	46	38	34	64	61	60	51	45	37	66	65	63	54	48	39
	1612	950	58	51	48	43	34	33	62	57	55	48	40	36	66	63	61	53	46	39	69	66	65	56	50	40
	1954	1150	59	53	49	44	35	34	65	59	56	49	41	37	68	64	62	54	47	40	70	68	66	58	51	41
	2430	1429	61	54	50	45	35	35	65	60	57	51	42	38	69	66	63	56	48	41	72	69	67	59	52	42
12	612	360	54	51	49	42	36	31	58	57	55	48	41	38	62	62	62	53	47	45	65	65	66	57	51	49
	2037	1200	57	53	51	44	37	33	61	59	57	50	43	40	66	64	64	55	49	47	68	68	68	59	53	51
	2548	1500	59	55	52	46	39	35	64	61	59	51	45	41	68	66	65	57	51	48	71	70	69	60	54	52
	3060	1800	61	57	53	47	40	36	65	62	60	53	46	43	70	68	67	58	52	50	72	71	70	62	55	54
	3500	2060	63	58	54	48	41	37	67	63	61	54	47	44	72	69	68	60	53	51	74	72	71	63	56	55
14	816	480	58	53	46	42	37	33	64	59	53	48	43	40	69	66	59	53	49	46	73	70	62	57	52	50
	2548	1500	61	54	50	45	40	36	66	61	56	50	46	42	72	68	62	56	52	49	75	72	66	59	53	53
	3398	2000	62	56	52	46	42	37	68	62	58	52	47	44	73	69	64	58	53	50	76	73	68	61	57	54
	4248	2500	63	57	54	48	43	39	69	63	60	53	49	45	74	70	66	59	56	52	77	74	70	62	58	56
	4760	2800	64	57	56	49	44	40	70	64	62	54	50	46	75	71	68	60	56	53	78	75	71	53	59	57
16	1071	630	58	52	49	45	41	34	63	59	55	51	47	42	69	66	60	56	53	49	73	70	64	60	57	53
	3398	2000	60	54	52	47	43	36	66	61	58	53	49	44	71	68	63	58	55	51	75	72	66	61	59	55
	4248	2500	62	56	54	48	44	38	67	62	60	54	50	45	73	69	65	60	56	52	77	73	68	63	60	57
	5097	3000	63	57	56	50	45	39	69	54	61	55	51	46	75	70	67	61	57	51	78	74	70	64	61	58
	5948	3500	64	58	57	51	46	40	70	65	63	56	32	47	76	71	68	62	58	55	79	75	71	65	62	59
	6232	3660	65	59	59	51	47	41	71	65	64	57	53	48	77	72	70	63	59	56	80	76	73	66	63	60

1. Sound Power levels Lw dB re 10^{-12} watts
2. NC–Based on ARI 855–98
3. Dashes (–) indicate NC's less than 20
4. CFM–Cubic feet / minute
5. CMH–Cubic meter / hour
6. pa–Pressnre given in Pascals
7. "W.G.–inches of Water Gauge

TERMINAL UNIT DISCHARGE SOUND POWER LEVEL WITH 1500MM

Inlet Size	Air Flow		125Pa(0.5"WG)						250Pa(1.0"WG)						500Pa(2.0"WG)						750Pa(3.0"WG)					
			Octave Band						Octave Band						Octave Band						Octave Band					
in	CMH	CFM	2	3	4	5	6	7	2	3	4	5	6	7	2	3	4	5	6	7	2	3	4	5	6	7
05	102	60	47	40	36	25	–	–	50	43	46	30	20	–	52	47	45	35	26	–	54	49	48	38	30	–
	230	140	52	45	41	30	–	–	55	49	45	35	23	–	58	53	50	40	29	–	59	55	53	43	33	–
	425	250	56	49	44	34	–	–	59	53	49	38	25	–	61	57	53	43	31	–	63	59	56	46	36	–
	612	360	59	52	46	36	21	–	61	56	51	41	27	–	64	60	56	46	33	–	65	62	56	49	36	–
06	153	90	47	39	34	24	–	–	50	43	40	29	–	–	53	47	45	35	26	–	54	50	48	38	30	–
	381	225	51	44	39	28	–	–	54	48	44	33	22	–	56	52	49	39	28	–	58	55	51	42	32	–
	511	300	53	47	42	31	–	–	56	52	47	36	23	–	59	56	52	41	29	–	61	58	55	45	33	–
	637	375	56	50	44	33	–	–	58	54	49	38	24	–	61	59	54	44	31	–	63	61	57	47	34	21
	880	517	57	52	46	35	–	–	60	57	51	40	25	–	63	61	56	45	31	–	65	63	59	48	35	22
07	204	120	49	42	37	28	–	–	52	47	43	31	–	–	56	51	48	37	26	21	58	54	51	43	30	26
	561	330	52	46	41	32	–	–	56	51	46	36	–	–	60	56	51	41	28	24	62	59	54	44	32	29
	935	550	57	52	46	37	–	–	61	57	51	41	23	20	65	62	56	46	30	28	67	64	59	49	36	33
	1190	700	60	54	47	38	–	–	63	59	53	43	24	22	67	64	56	48	31	30	59	67	61	52	36	34
08	272	160	52	45	40	32	–	–	55	50	46	37	25	–	59	55	52	42	32	25	61	58	56	45	36	27
	849	500	54	48	42	34	–	–	58	53	48	39	26	20	61	58	64	44	33	27	63	60	58	47	37	31
	1018	600	56	50	44	36	21	–	60	55	50	41	27	22	63	60	56	46	34	28	65	62	59	49	37	32
	1188	700	58	51	45	37	21	–	65	56	51	42	28	23	65	61	57	47	34	29	67	64	60	50	38	33
	1560	920	59	53	46	38	22	–	63	58	52	43	28	24	66	63	58	48	35	30	68	65	61	51	39	34
09	374	220	52	45	43	33	21	–	56	51	49	38	28	26	59	57	55	44	36	33	61	60	59	47	39	37
	935	550	55	48	45	36	22	20	59	54	51	42	29	28	63	60	58	47	36	36	65	63	61	50	40	39
	1530	900	58	51	47	39	23	22	61	56	53	44	30	29	65	62	59	49	37	36	67	65	63	52	41	41
	1972	1160	60	52	48	40	23	23	63	58	54	46	30	30	67	64	60	51	38	37	69	67	64	54	42	42
10	936	550	52	46	42	33	22	–	56	51	49	38	28	26	59	56	56	44	35	33	62	59	59	47	38	36
	1274	750	55	49	44	36	33	22	59	54	51	41	30	28	62	59	58	47	36	35	65	62	61	50	40	38
	1612	950	57	51	46	38	25	23	61	56	53	43	61	30	65	61	59	49	37	36	67	64	63	52	41	40
	1954	1150	59	52	47	40	25	24	63	57	54	45	32	31	67	63	60	50	38	37	69	66	64	53	42	41
	2430	1429	61	54	48	41	26	25	64	59	55	46	33	32	68	64	61	52	39	38	70	67	65	55	43	42
12	612	360	54	52	48	39	27	25	58	57	55	45	34	32	61	62	61	51	41	38	63	65	65	55	45	42
	2037	1200	57	54	50	41	29	27	61	59	57	47	36	34	65	64	63	53	43	40	67	67	67	57	47	44
	2548	1500	60	56	51	43	31	29	63	61	58	49	37	35	67	66	64	55	44	42	69	69	68	59	48	46
	3060	1800	62	58	52	44	32	30	65	63	59	50	39	37	69	68	66	56	45	43	71	71	69	60	50	47
	3500	2060	63	59	53	45	33	31	67	64	60	51	39	38	71	70	66	57	46	44	73	72	70	61	50	48
14	816	480	58	53	46	38	29	29	64	59	52	43	35	35	69	66	58	49	42	42	73	70	61	52	46	46
	2548	1500	61	54	49	41	32	31	66	61	55	46	38	38	72	68	61	52	45	44	75	72	65	55	48	48
	3398	2000	62	56	52	43	34	33	68	62	58	48	40	40	73	69	64	54	47	46	76	73	68	58	50	50
	4248	2500	63	57	54	44	35	35	69	63	60	50	42	41	74	70	66	56	48	48	77	74	70	59	52	52
	4760	2800	64	57	56	46	37	36	70	64	62	51	43	42	75	71	68	57	49	49	78	75	71	61	53	53
16	1071	630	58	52	49	41	34	29	63	59	55	47	40	36	69	66	1	54	47	43	73	70	64	57	51	48
	3398	2000	60	54	52	43	36	31	66	61	58	50	42	38	71	68	64	56	49	46	75	72	67	59	53	50
	4248	2500	62	56	54	45	37	33	67	62	60	51	44	40	73	69	66	57	51	48	77	73	69	61	55	52
	5097	3000	63	57	56	46	39	35	69	64	62	52	45	42	75	70	68	69	52	49	78	74	71	62	56	54
	5948	3500	64	58	57	48	40	36	70	65	63	54	46	43	76	71	69	60	53	51	79	75	73	53	56	77
	6232	3660	65	59	59	48	41	37	71	65	65	55	47	44	77	72	71	61	54	52	80	76	74	64	58	56

1. Sound Power levels Lw dB re 10^{-12} watts
2. NC–Based on ARI 855–98
3. Dashes (–) indicate NC's less than 20
4. CFM–Cubic feet / minute
5. CMH–Cubic meter / hour
6. pa–Pressnre given in Pascals
7. "W.G.–inches of Water Gauge

TERMINAL UNIT RADIATED SOUND POWER LEVEL

Inlet Size	Air Flow		125Pa(0.5"WG)						250Pa(1.0"WG)						500Pa(2.0"WG)						750Pa(3.0"WG)					
			Octave Band						Octave Band						Octave Band						Octave Band					
in	CMH	CFM	2	3	4	5	6	7	2	3	4	5	6	7	2	3	4	5	6	7	2	3	4	5	6	7
05	102	60	47	35	29	23	–	–	49	38	33	27	23	20	51	41	37	32	29	27	52	42	39	34	37	31
	230	140	54	41	34	28	22	–	56	44	38	32	28	24	58	47	42	37	34	31	59	49	44	30	37	35
	425	250	58	46	38	31	25	–	60	49	42	36	31	26	62	51	46	40	37	33	63	53	48	43	40	37
	612	360	62	49	41	34	28	21	64	52	45	38	33	28	66	55	48	43	39	35	67	56	51	45	42	39
06	153	90	47	35	31	25	20	–	50	39	35	29	26	22	53	43	38	34	32	28	55	45	40	37	36	32
	381	225	50	40	36	29	24	–	54	44	39	34	30	25	57	48	43	38	36	31	59	50	45	41	39	35
	511	300	53	43	39	32	26	20	56	47	43	27	32	26	60	51	46	41	38	33	62	53	49	44	42	36
	637	375	55	45	42	34	28	22	58	49	45	39	34	28	62	53	49	43	40	34	64	56	51	46	43	38
	880	517	57	48	44	36	29	23	60	51	47	41	35	29	64	55	51	45	42	35	65	58	53	48	45	39
07	204	120	50	37	31	28	22	–	52	43	37	32	26	20	54	47	42	36	30	26	56	50	46	38	33	29
	561	330	53	41	34	31	25	–	56	45	40	35	29	24	58	50	46	39	34	29	58	59	49	41	36	32
	935	550	58	45	38	35	30	23	60	50	44	39	34	28	62	55	50	43	38	33	64	58	53	45	41	36
	1190	700	62	47	40	37	32	24	62	52	46	42	36	29	64	58	51	46	41	34	65	80	55	47	42	37
08	272	160	53	41	34	29	25	24	57	46	40	35	31	32	60	51	46	40	37	40	62	54	49	43	41	44
	849	500	55	44	36	31	26	25	59	49	42	37	32	32	62	54	48	42	39	40	64	56	51	45	42	45
	1018	600	57	46	38	33	27	25	60	51	43	38	33	33	64	56	49	43	40	41	66	58	53	47	43	46
	1188	700	58	47	39	34	28	25	62	52	45	39	34	33	65	57	51	45	41	41	67	60	54	48	44	46
	1560	900	60	49	40	35	29	26	63	54	46	41	35	34	67	59	52	46	41	42	69	62	55	49	45	46
09	374	220	50	37	32	27	21	–	54	45	39	33	28	26	57	52	46	40	34	33	59	56	50	44	38	37
	935	550	52	40	34	30	24	20	56	47	41	36	32	27	59	55	49	43	36	34	61	59	53	46	40	38
	1530	900	50	42	36	32	25	21	57	49	43	38	32	28	61	57	50	45	38	35	63	61	55	48	42	39
	1972	1160	56	44	39	34	27	23	58	51	45	40	38	29	63	58	52	47	40	36	64	64	56	51	48	39
10	936	550	50	39	32	26	23	22	53	46	39	32	27	27	57	52	46	37	32	33	59	56	50	41	35	36
	1274	750	52	42	35	29	25	23	55	48	42	34	30	29	59	54	48	40	35	34	61	58	52	43	38	38
	1612	950	53	43	37	31	27	24	57	50	44	37	32	30	61	56	50	2	37	35	63	60	54	45	39	39
	1954	1150	55	45	39	33	29	25	58	51	45	38	33	31	62	57	52	44	38	36	64	61	56	47	41	40
	2430	1427	56	46	40	34	30	26	59	52	47	40	35	32	63	59	53	45	40	37	65	62	57	48	42	40
12	612	360	49	44	37	31	24	20	53	49	43	37	29	25	58	55	50	42	34	30	60	58	53	45	37	33
	2037	1200	52	45	39	34	27	22	56	51	45	40	32	27	61	57	52	45	37	32	63	60	55	48	40	35
	2548	1500	54	47	41	36	30	24	59	52	47	42	35	29	63	58	53	47	40	34	65	51	47	50	43	37
	3060	1800	56	48	42	38	32	26	61	53	48	43	37	31	65	59	54	49	42	36	67	62	58	52	45	39
	3500	2060	58	49	43	40	34	27	62	54	49	45	39	32	66	60	55	50	44	37	69	63	59	53	47	40
14	816	480	52	44	35	30	22	–	56	50	40	35	28	22	59	55	45	40	33	28	62	59	48	43	36	31
	2548	1500	56	47	41	34	28	22	60	53	46	40	33	28	64	59	51	45	38	33	66	62	56	48	41	36
	3398	2000	59	49	45	38	32	26	63	55	51	43	37	31	66	61	56	48	42	37	69	65	59	51	45	40
	4248	2500	61	51	49	40	35	29	65	57	54	56	40	34	69	63	59	51	45	40	71	66	62	54	48	43
	4760	2800	63	52	51	42	38	31	67	58	57	48	43	36	71	64	62	53	48	42	73	68	65	56	51	45
16	1071	630	54	46	39	34	29	25	58	52	44	39	34	30	61	57	48	44	39	35	64	60	51	47	31	37
	3398	2000	57	48	44	38	33	28	61	54	49	43	38	33	64	60	53	47	43	38	67	63	56	50	45	41
	4248	2500	59	50	48	41	37	31	63	56	53	45	41	36	67	61	57	50	46	41	69	65	60	53	48	44
	5097	3000	61	52	51	43	39	33	65	57	56	47	44	38	69	63	60	52	48	43	71	66	63	55	51	46
	5948	3500	63	53	54	45	41	35	57	59	58	49	46	40	70	64	63	54	50	45	73	68	66	57	53	48
	6232	3660	64	54	56	46	43	27	68	60	61	51	48	42	72	65	65	56	52	47	74	69	68	58	55	50

1. Sound Power levels Lw dB re 10^{-12} watts
2. NC–Based on ARI 855–98
3. Dashes (–) indicate NC's less than 20
4. CFM–Cubic feet / minute
5. CMH–Cubic meter / hour
6. pa–Pressnre given in Pascals
7. "W.G.–inches of Water Gauge

TERMINAL UNIT HEAT WATER COIL DATA (Kw)

Type	Rows	Coil	HD Loss	Airflow(CMH)					
		L/s	KPa	212	299	338	425	594	680
TBVAV-S-T100-05 TBVAV-S-T100-06	1	0.03	0.39	1.64	1.90	1.99	2.17	2.43	2.52
		0.06	1.46	1.82	2.17	2.29	2.52	2.90	3.05
		0.13	5.56	1.96	2.34	2.49	2.78	3.22	3.40
		0.19	12.22	1.99	2.40	2.58	2.87	3.34	3.55
		Through the Coil, △ ps		4.98	7.47	9.95	12.44	24.88	29.86
	2	0.06	0.36	2.72	3.28	3.52	3.93	4.54	4.78
		0.13	1.40	2.99	3.66	3.99	4.48	5.33	5.69
		0.25	5.35	3.14	3.93	4.25	4.86	5.86	6.30
		0.38	11.72	3.19	4.02	4.37	5.01	6.10	6.54
		Through the Coil, △ ps		9.95	17.42	19.91	29.86	52.26	64.70

Type	Rows	Coil	HD Loss	Airflow(CMH)					
		L/s	KPa	338	511	680	1019	1188	1361
TBVAV-S-T100-07 TBVAV-S-T100-08	1	0.03	0.51	2.29	2.67	2.93	3.28	3.43	3.55
		0.06	1.97	2.61	3.14	3.55	4.10	4.31	4.48
		0.13	7.47	2.84	3.46	3.96	4.69	4.95	5.22
		0.19	16.38	2.93	3.60	4.13	4.92	5.25	5.51
		Through the Coil, △ ps		4.98	9.95	17.42	37.33	47.28	59.72
	2	0.06	0.51	3.93	4.78	5.42	6.30	6.62	0.92
		0.13	1.91	4.40	5.54	6.42	7.74	8.62	8.70
		0.25	7.26	4.69	6.04	7.12	8.76	9.44	10.02
		0.38	15.90	4.81	6.21	7.39	9.17	9.94	10.58
		Through the Coil, △ ps		12.44	24.88	39.81	79.63	102.02	126.91

Type	Rows	Coil	HD Loss	Airflow(CMH)					
		L/s	KPa	511	850	1188	1530	1699	1868
TBVAV-S-T100-09 TBVAV-S-T100-10	1	0.06	0.33	3.49	4.28	4.78	5.16	5.30	5.45
		0.13	1.26	3.96	4.98	5.71	6.24	6.48	6.68
		0.25	4.81	4.25	5.45	6.33	7.03	7.33	7.59
		0.38	10.52	4.37	5.66	6.59	7.36	7.68	7.97
		Through the Coil, △ ps		4.98	14.93	24.88	37.33	47.28	54.74
	2	0.06	0.69	5.48	6.89	7.80	8.44	8.70	8.94
		0.13	2.63	6.33	8.32	9.73	10.81	11.25	11.66
		0.25	9.98	6.86	9.29	11.14	12.57	13.19	13.77
		0.38	21.82	7.06	9.70	1.89	13.31	14.01	14.65
		Through the Coil, △ ps		12.44	29.96	54.74	82.12	97.05	114.47

Type	Rows	Coil	HD Loss	Airflow(CMH)					
		L/s	KPa	680	1018	1300	2037	2379	2718
TBVAV-S-T100-12	1	0.06	0.45	4.57	5.33	5.86	6.59	6.86	7.09
		0.13	1.67	5.25	6.30	7.06	8.18	8.62	9.00
		0.25	6.34	5.89	6.95	7.91	8.35	9.94	10.43
		0.38	13.84	5.86	7.21	8.24	9.85	10.46	11.02
		Through the Coil, △ ps		4.98	9.95	17.43	37.33	47.28	59.72
	2	0.06	0.93	6.95	8.26	9.14	10.32	10.73	11.08
		0.13	3.47	8.24	10.20	11.66	13.75	14.54	15.21
		0.25	13.06	9.06	11.55	13.48	16.44	17.58	18.58
		0.38	28.48	9.48	12.07	14.24	17.55	18.90	20.08
		Through the Coil, △ ps		12.44	24.88	39.81	79.63	102.02	126.91

TERMINAL UNIT HEAT WATER COIL DATA (Kw)

Type	Rows	Coil	HD Loss	Airflow(CMH)					
		L/s	KPa	1018	1090	2379	3080	3398	3736
TBVAV–S–T100–14	1	0.06	0.60	6.30	7.47	8.24	8.76	8.97	9.14
		0.13	2.27	7.47	9.26	10.46	11.37	11.72	12.07
		0.25	8.58	8.24	10.46	12.10	13.36	13.89	14.36
		0.38	18.71	8.56	11.02	12.78	14.18	14.80	15.36
		Through the Coil, △ ps		4.98	14.93	24.88	37.33	47.28	54.74
	2	0.09	0.99	10.35	12.78	14.27	15.33	15.74	16.12
		0.19	3.80	12.25	15.94	18.49	20.40	21.19	21.89
		0.38	14.50	13.48	18.17	21.63	24.35	25.53	26.58
		0.57	31.83	13.95	19.08	22.95	26.02	27.37	28.60
		Through the Coil, △ ps		12.44	29.86	54.74	82.12	97.05	114.47

Type	Rows	Coil	HD Loss	Airflow(CMH)					
		L/s	KPa	1360	2037	2718	3398	4078	4755
TBVAV–S–T100–16	1	0.06	0.69	7.50	8.53	9.20	9.70	10.11	10.40
		0.13	2.57	9.17	10.79	11.93	12.84	13.54	14.16
		0.25	9.71	10.29	12.40	13.98	15.27	16.29	17.20
		0.38	21.16	10.73	13.07	14.86	16.29	17.50	18.52
		Through the Coil, △ ps		7.47	14.93	22.40	34.84	47.28	58.72
	2	0.09	1.11	12.40	14.45	15.80	16.76	17.53	18.08
		0.19	4.18	15.15	18.49	20.93	22.77	24.27	25.50
		0.38	15.99	17.00	21.42	24.79	27.56	29.81	31.74
		0.57	35.12	17.73	22.60	26.44	29.57	32.24	34.55
		Through the Coil, △ ps		14.93	29.86	49.77	72.16	97.05	126.91

Correction Factors – Hot Water Coils

		Entering water temperature, ℃							
		49	54	60	66	71	77	82	88
Entering Air Temp℃	10	0.54	0.62	0.71	0.79	0.87	0.96	1.04	1.12
	13	0.50	0.58	0.67	0.75	0.83	0.92	1.00	1.08
	16	0.47	0.55	0.63	0.71	0.79	0.88	0.96	1.04
	18	0.43	0.51	0.59	0.67	0.75	0.84	0.92	1.00

AIR TERMINALS WITH MULTIPLE OUTLET PLENUM ARRANGEMENT

TB–MOA–A, B, C, D, E, F

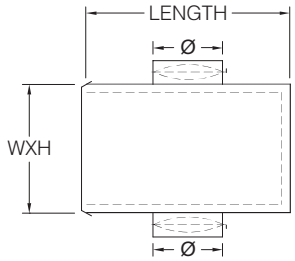

ARRANGEMENT–A

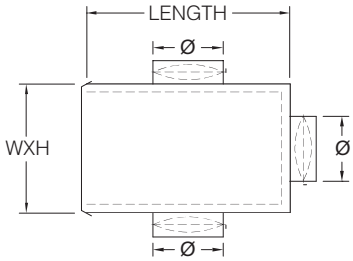

ARRANGEMENT–B

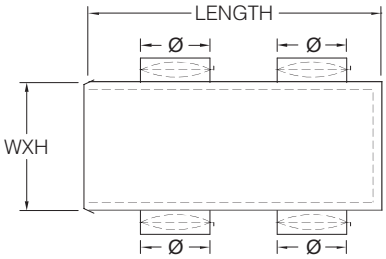

ARRANGEMENT–C

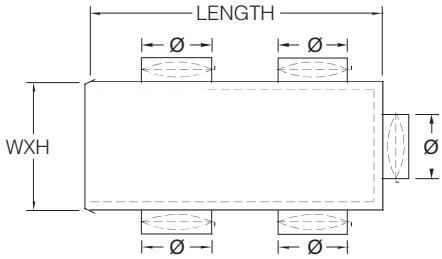

ARRANGEMENT–D

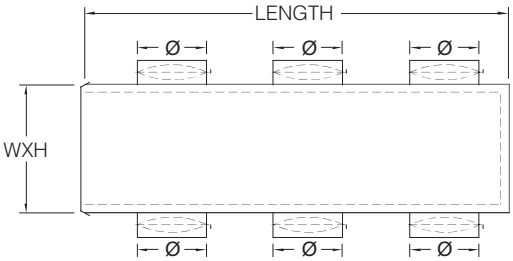

ARRANGEMENT–E

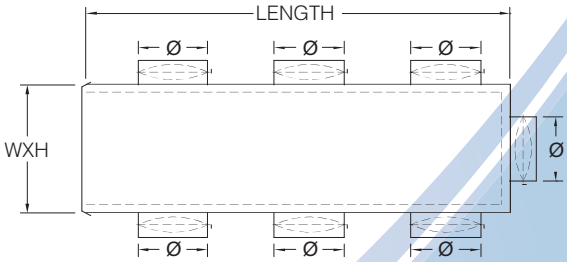

ARRANGEMENT–F

Note:
Multiple outlet plenums can be supplied in the upon arragement and the dimensions will be as per the customer's reqiurement.

TBVAV–RS–T RECTANGLE SINGLE DUCT VAV AND CONTROL

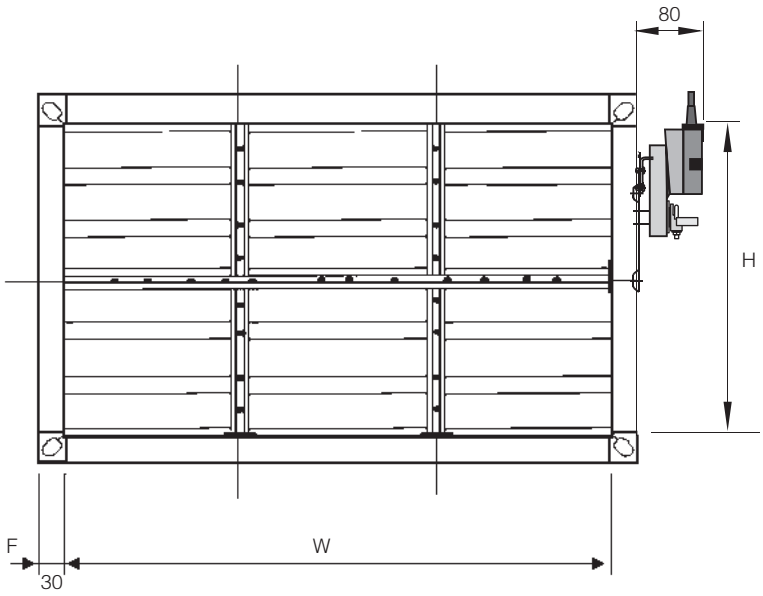

FRONT VIEW

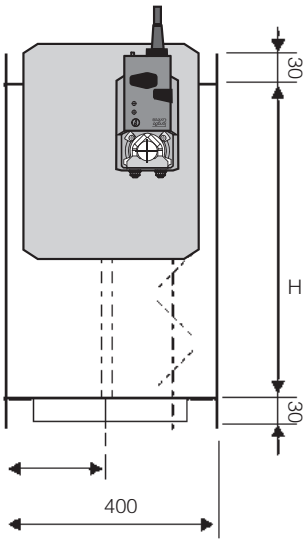

RIGHT VIEW

AIR VOLUME TABLE–1

V=2m/s

UNIT: mm

WIDTH (W)	HEIGHT(H)											
	200	250	300	350	400	450	500	600	700	800	900	1000
200	288											
250	360	450										
300	432	540	648									
350	504	630	756	882								
400	576	720	864	1008	1152							
450	648	810	972	1134	1296	1458						
500	720	900	1080	1260	1440	1620	1800					
550		990	1188	1386	1584	1782	1980					
600			1296	1512	1728	1944	2160	2592				
650			1404	1638	1872	2106	2340	2808				
700			1512	1764	2016	2268	2520	3024	3528			
800				2016	2304	2592	2880	3546	4032	4608		
900					2592	2916	3240	3888	4536	5184	5832	
1000					2880	3240	3600	4320	5040	5760	6480	7200

AIR VOLUME TABLE–2

V=4m/s UNIT: mm

WIDTH (W)	HEIGHT(H)											
	200	250	300	350	400	450	500	600	700	800	900	1000
200	576											
250	720	900										
300	864	1080	1296									
350	1080	1260	1512	1764								
400	1152	1440	1728	2016	2304							
450	1296	1620	1944	2268	2592	2916						
500	1440	180	2160	2520	2880	3240	3600					
550		1980	2376	2772	3168	3564	3960					
600			2592	3024	3456	3888	4320	5184				
650			2808	3276	3744	4212	4680	5616				
700			3024	3528	4032	4536	5040	6048	7056			
800				4032	4608	5184	5760	6912	8064	9216		
900					5184	5832	6480	7776	9072	10368	11664	
1000					5760	6480	7200	8640	10080	1150	12960	14400

AIR VOLUME TABLE–3

V=6m/s UNIT: mm

WIDTH (W)	HEIGHT(H)											
	200	250	300	350	400	450	500	600	700	800	900	1000
200	864											
250	1080	1350										
300	1296	1620	1944									
350	1512	1890	2268	2646								
400	1728	2160	2592	3024	4374							
450	1944	2430	2916	3402	3888	4374						
500	2160	2700	3240	3780	4320	4860	7776					
550		2970	3564	4158	4752	5346	5940					
600			3888	4536	5184	5832	6480	7776				
650			4212	4914	5616	6318	7560	8424				
700			4536	5292	6048	6804	7560	86409072	10574			
800				6048	6912	7776	8640	10368	12096	13824		
900					776	8748	9720	11664	13608	15552	17496	
1000					8640	9720	10800	12960	15120	17280	19440	21600

AIR VOLUME TABLE–4

V=8m/s UNIT: mm

WIDTH (W)	HEIGHT(H)											
	200	250	300	350	400	450	500	600	700	800	900	1000
200	1152											
250	1440	1800										
300	1728	540	648									
350	2016	2520	3024	3528								
400	2304	2880	3456	4032	4508							
450	2592	3240	3888	4536	5184	5832						
500	2880	3600	4320	5040	5760	6480	7200					
550		3960	4752	5544	6336	6968	7920					
600			5184	6048	6904	7776	8640	10368				
650			5616	6552	7488	8424	9360	11232				
700			6048	7056	8064	9072	10080	12096	14112			
800				8064	9216	10368	11520	13824	16128	18432		
900					10368	11664	12960	15552	18144	20736	23328	
1000					11520	12960	14400	17280	20160	23040	25920	28800

AIR VOLUME TABLE–5

V=10m/s UNIT: mm

WIDTH (W)	HEIGHT(H)											
	200	250	300	350	400	450	500	600	700	800	900	1000
200	1440											
250	1800	2250										
300	2160	2700	3240									
350	2520	3150	3780	4410								
400	2880	3600	4320	5040	5760							
450	3240	4050	4860	5670	6480	7290						
500	3600	4500	5400	6300	7200	8100	9000					
550		4950	5940	6930	7920	8710	9900					
600			6480	7560	8630	9720	10800	12960				
650			7020	8190	9360	10530	117000	14040				
700			7560	8820	10080	11340	12600	15120	17640			
800				10080	11520	12960	14400	17280	20160	23040		
900					12960	14580	16200	19440	22680	25920	29160	
1000					14400	16200	18000	21600	25200	28800	32400	36000

TBVAV–SR–T ROUND SINGLE DUCT VAV AND CONTROL

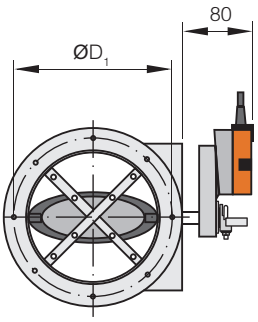

FRONT VIEW

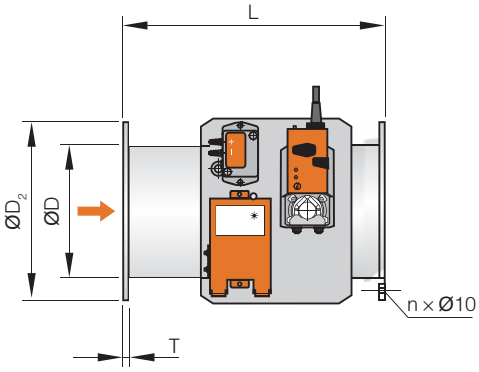

RIGHT VIEW

UNIT: mm

TYPE	ØD	L	$ØD_1$	$ØD_2$	n	T
TBVAV–SR–T–125	125	400	160	185	8	8
TBVAV–SR–T–160	160	400	200	230	8	8
TBVAV–SR–T–200	200	400	240	270	8	8

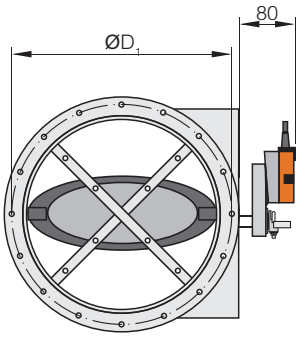

FRONT VIEW

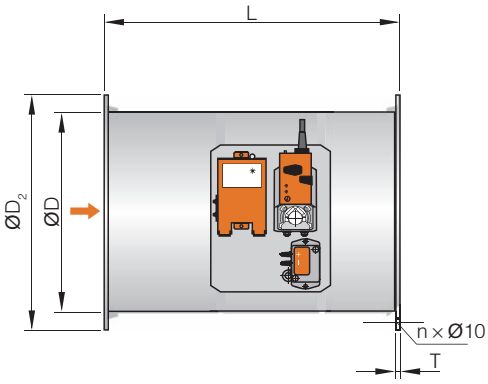

RIGHT VIEW

UNIT: mm

TYPE	ØD	L	$ØD_1$	$ØD_2$	n	T
TBVAV–SR–T–250	250	400	290	310	12	8
TBVAV–SR–T–315	315	600	350	396	12	10
TBVAV–SR–T–400	400	600	450	480	16	10

TBVAV–SR ROUND SINGLE DUCT VAV AND CONTROL

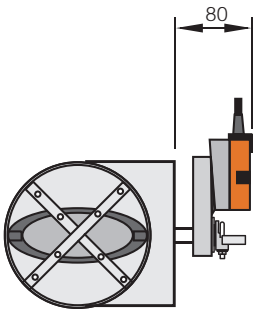

FRONT VIEW

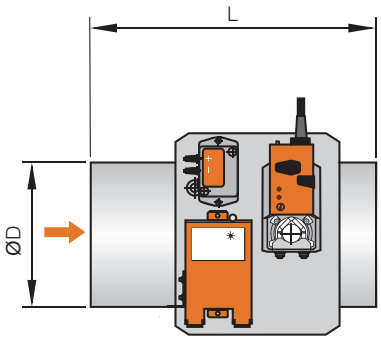

RIGHT VIEW

UNIT: mm

TYPE	ØD	L
TBVAV–SR–125	125	400
TBVAV–SR–160	160	400
TBVAV–SR–200	200	400

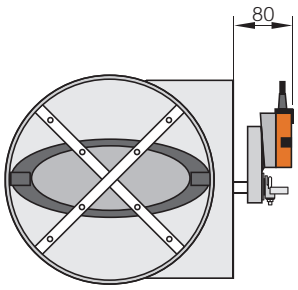

FRONT VIEW

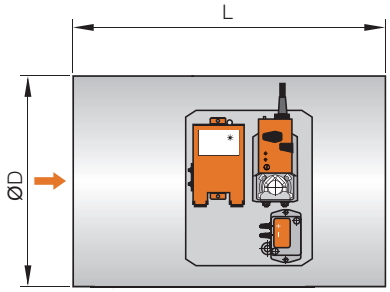

RIGHT VIEW

UNIT: mm

TYPE	ØD	L
TBVAV–SR–250	250	400
TBVAV–SR–315	315	600
TBVAV–SR–400	400	600

Application Description ZoneEase VAV AP

Selection № : 2 – Single duct SUP / Cooling only

Application: No 2

The ZoneEase VAV system modulates the supply air damper of the VAV box for cooling based on room temperature setpoint. In order for it to work properly, the central air handling unit must provide cool primary air.

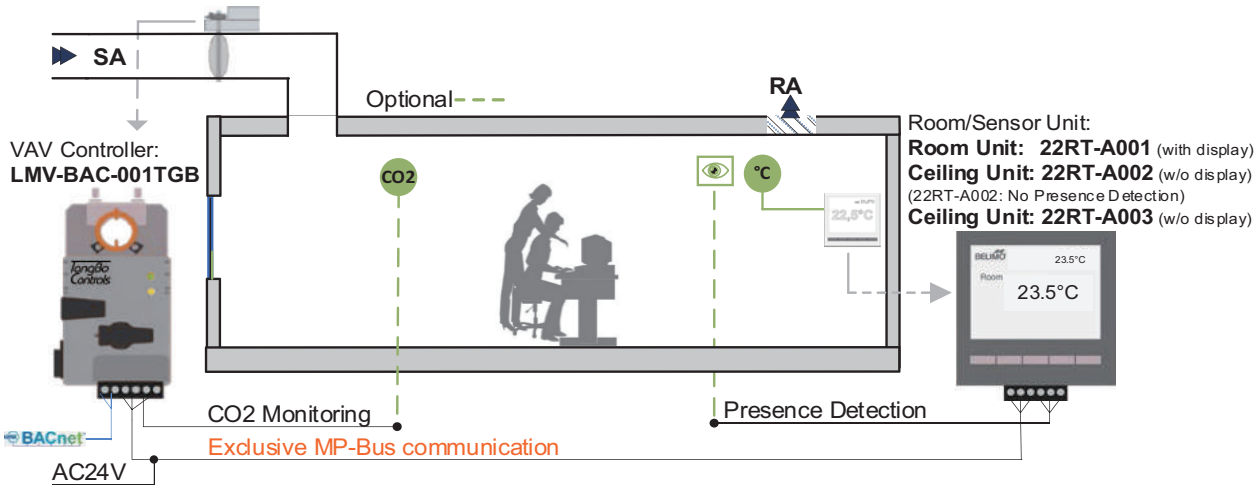

Selection № : 3 – Single duct SUP – Cooling/Heating only

Application: No 3

The ZoneEase VAV system modulates the supply air damper of the VAV box for cooling or heating based on room temperature setpoint. In order for it to work properly, the central air handling unit must provide cool or heated primary air.

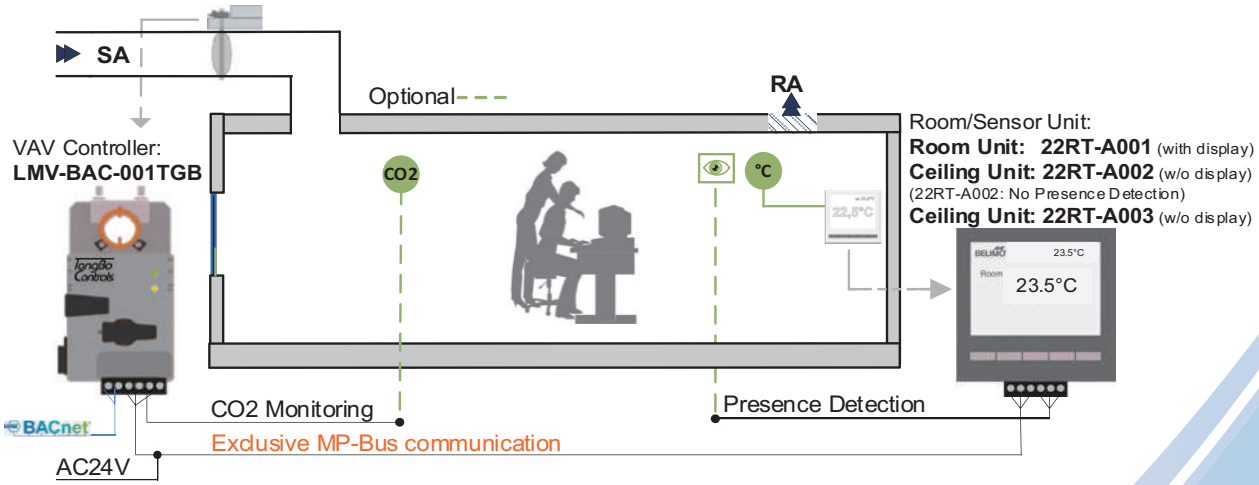

Selection № : 6 – Single duct SUP – Cooling + On–Off Reheat Valve

Application: No 6

The ZoneEase VAV system modulates the supply air damper of the VAV box for cooling with on / off water reheat based on room temperature setpoint. In order for it to work properly, the central air handling unit must provide cool primary air.

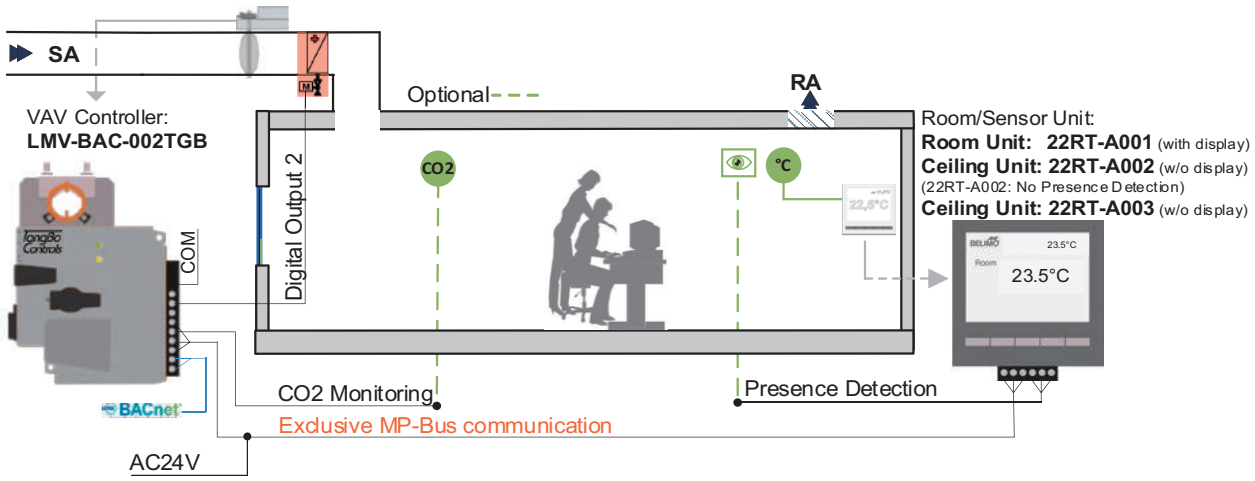

Selection № : 7 – Single duct SUP – Cooling + Modulating Reheat Valve

Application: No 7

The ZoneEase VAV system modulates the supply air damper of the VAV box for cooling with modulating reheat valve based on room temperature setpoint. In order for it to work properly, the central air handling unit must provide cool primary air.

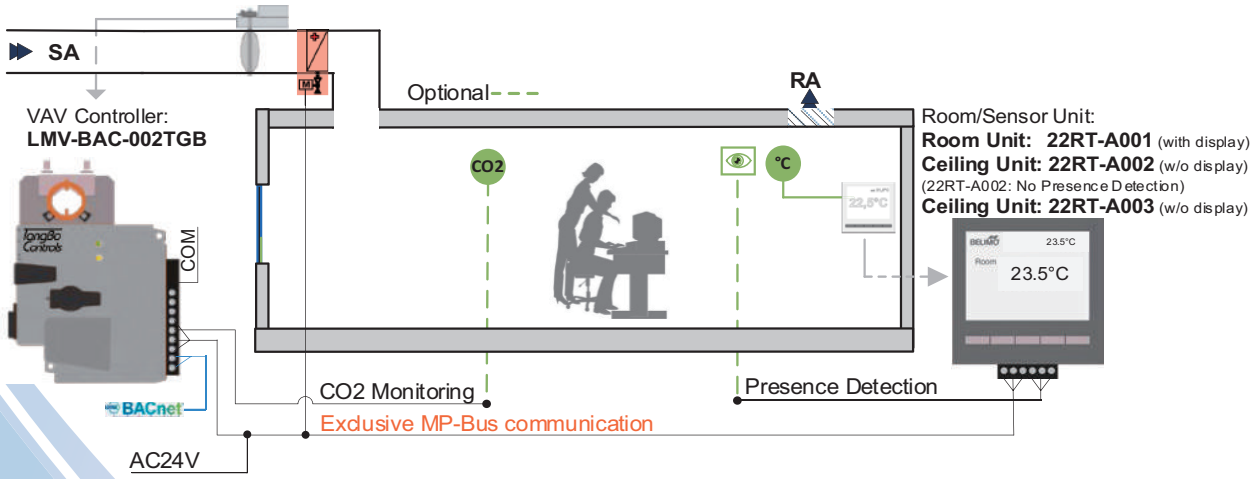

Selection № : 8 – VAV–Demand Control Ventilation by CO2 Application: No 8

The ZoneEase VAV system modulates the supply air damper of the VAV box for fresh air into the zone. Modulation is based on the CO2 concentration from the return air duct (RA) of air handling unit and the desirable indoor air quality (CO2 setpoint). CO2 setpoint and the current CO2 value are accessible at the Room Unit or Ceiling Sensor.

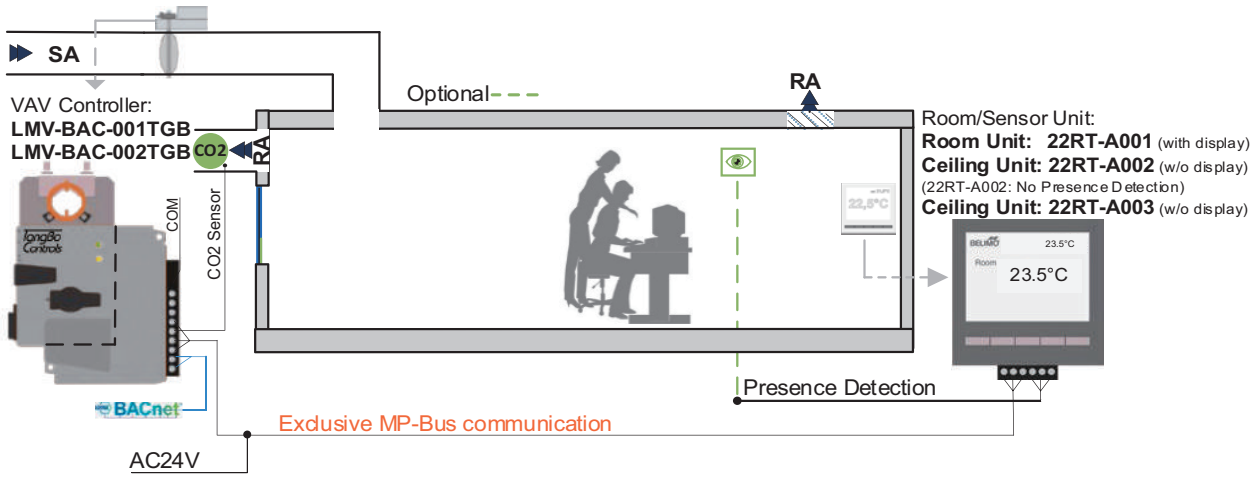

Selection № : 9 – VAV–Flow Control Application: No 9

The ZoneEase VAV system modulates the supply air damper of the VAV box based on the air volume flow setpoint. In order for it to work properly, the central air handling unit must provide primary air.

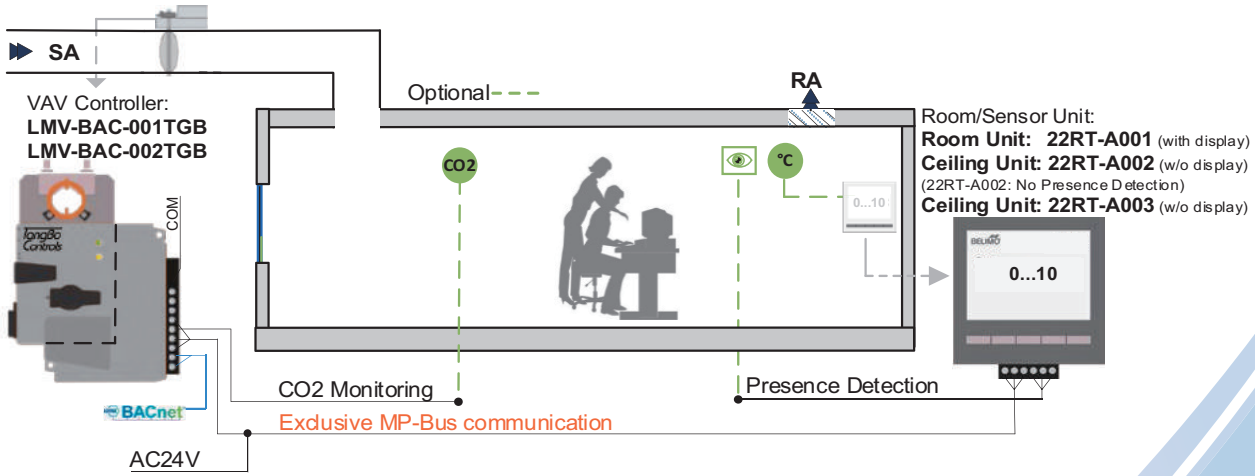

Cloud VAV Controller set with Room Unit of Choice and Integrated pressure sensor, controller and damper actuator for pressure–independent temperature control VAV, Simple VAV and Demard Control Ventilation applications in the comfort zone.

- NFC interface for Smartphone Powerless Commissioning
- Workforce Efficiency Improvement with Cloud operation
- BACnet MS/TP Integration
- With AI for CO_2 sensor
- Standardized Control Applications for easy implimentations.

22RT–A001

22RT–A002

22RT–A003

LMV–BAC–001 TGB

LMV–BAC–002 TGB

Set Type	ZoneEase VAV Controller Actuator	Room Unit
ZE–SET001	LMV–BAC–001 TGB	22RT–A001
ZE–SET002*	LMV–BAC–001 TGB	22RT–A002*
ZE–SET003	LMV–BAC–001 TGB	22RT–A003
ZE–SET004	LMV–BAC–002 TGB	22RT–A001
ZE–SET005*	LMV–BAC–002 TGB	22RT–A002*
ZE–SET006	LMV–BAC–002 TGB	22RT–A003

Brief description

Application
The ZoneEase VAV has PI control characteristics and is used for pressure–independent temperature control of VAV units in the comfort zone.

Pressure measurement
The integrated maintenance–free Belimo D3 pressure valve sensor is also suitable for very small volumetric flows. It is for this reason that it enables versatile applications in the comfort zone, e.g. in offices, hospitals, hotels, residential construction, cruise ships, etc.

VAV – Temperature control
For pressure–independent temperature control VAV applications, room temperature is obtained rom Room Unit. Room Temperature Setpoint is obtained from the Room Unit through manual buttons (22RT–A001 only) or APP or from command through BACnet MS/TP. The operating range $\dot{V}$min ... $\dot{V}$max or reheating valve or electric reheater are controlled based on heating demand or cooling demand, depending on temperature difference (setpoint minus actual), PBand value (adjustable) and Tn value (adjustable Integral gain).

VAV/CAV – variable/constant volumetric flow control
For variable volumetric flow applications with a modulating reference variable, The operating range $\dot{V}$min ... $\dot{V}$max can be controlled via BACnet, APP or Room Unit (22RTA001).

VAV – Demand Control Ventilation (DCV)
For DCV applications, The operating range $\dot{V}$min ... $\dot{V}$max are controlled based on demand, dependng on CO_2 difference (setpoint minus actual), Tn_CO_2 value (adjustable)and Tn_CO_2 value (adjustable).

Integration
BACnet MS/TP integration.

BACnet function
Addressable from 1 to 127 in a singular BACnet MS/TP network. Recommended to have repeater for every 32 BACnet Devices. Entire BACnet internetwork address limited by 4194303 device, as according to BACnet Limitation.

Additional Sensor integration
A CO_2 Sensor can be connected to the ZoneEase Compact Controller for data collection purpose in Temperature controlled applications and as an control input for DCV application.

Operating and service devices
Actuator and Room Unit NFC interface for Android Smartphone Belimo Assistant App.

Test function / test display
The ZoneEase VAV features two LEDs which shows power status, bus communication, adaptation.

OEM factory settings
The ZoneEase VAV is mounted on the VAV box unit by the unit manufacturer, who adjusts and tests it according to the application.

System Technical Data

Electrical Data	
Nominal voltage	AC 24V, 50/60Hz
Operating range	AC 19.2 ··· 28.8 V
Power consumption	7 VA (with LMV–BAC–002 and Room Unit), DO Full load connected
	5 VA (with LMV–BAC–001 and Room Unit)
Ambient Conditions	
Operating Temperature/Humidity	0...50℃ / 5% tp 95% non–condensing
Storage Temperature	–40···80℃ (LMV–BAC–001 / LMV–BAC–002 / 22RT–A002 / 22RT–A003)
	0···60℃ (22RT–A001)
Control function (application number)	– VAV–Demand Control Ventilation by CO2 (8)
	– VAV–CAV (9)
	– VAV–Temperature Control
	No Application Selected (1)
	Cooling Only (2)
	Cooling/Heating Only (3)
	Cooling with Reheat 1 Stage (4)
	Cooling with Reheat 2 Stage (5)
	Cooling with on–off Reheat Valve (6)
	cooling with Modulating Reheat Valve (7)
	Cooling with Parallel Fan (10)
	Cooling with Parallel Fan+Reheat 1 Stage (11)
	Cooling with Parallel Fan+Reheat 1/2 Stage (12)
	Cooling with Parallel Fan+Reheat on–off Valve (13)
	Cooling with Parallel Fan+Reheat Modulating Valve (14)
	Cooling with Series Fan (15)
	Heating or Cooling with Series Fan (16)
	Cooling with Series Fan plus Reheat 1 Stage (17)
	Cooling with Series Fan plus Reheat 1/2 Stage (18)
	Cooling with Series Fan plus Reheat On–Off valve (19)
	Cooling with Series Fan plus Reheat Modulating valve (20)
Safety	
Protection class	III Safety extra–low voltage
Degree of protection	IP20 (overall), IP30 (Room unit)
EMC	CE according to 89/336/EEC, EN60730–1:2000 + A2:2008, EN60730–2–14:1997 +
	A2:2008 EN61000–6–2:05 and EN61000–6–3:07 + A1:11, EN60730–2–9:2010
Mode of operation	Type 1 (in acc. with EN 60730–1)
Rated impulse voltage	0.8 kV (in accordance with EN 60730–1)
Control pollution degree	2 (in accordance with EN 60730–1)
	Maintenance Maintenance–free
Data for BACnet	
Protocol	BACnet MS/TP (RS–485), not galvanically isolated
Number of nodes	Addressable from 1 to 127, 32 nodes per repeater
Baudrates	9 600, 19 200, 38 400 (Default), 76 800, 115 200 Bd
End of Line Termination Resistor	Required, 120 Ω typical
Parameterisation	Belimo Cloud Business Application
	(Access by www.ZoneEase.com or ZoneEase.Cloud.Belimo.com)
	Belimo ZoneEase VAV App (Google Play Store (www.google.xx) or Baidu Mobile Assistant
	(shouji.baidu.com) or 360 Mobile Assistant (sj.360.cn)
	BACnet MS/TP (Please refers to datapoint list)
Protocol Implementation Conformance Statement(PICS)	Please refers to BACnet Testing Laboratories.
	http://www.bacnetinternational.net/btl/index.php?m=87

ZoneEase VAV Controller Actuator

Actuator	Brushless, non–blocking actuator with power–save mode
Torque	5Nm
Inputs / Outputs	Analogue Input for CO2 sensor connection, 0–10V
	3 x Digital Triac Output, 24VAC, max. 500 mA@room temperature
Speed	60s max full span (Boost, Manual Override), 150s max full span
Direction of rotation	cw / ccw (configurable)
Adaptation	Capture of setting range and resolution to control range
Gear disengagement	Push–button lockable/self–resetting
Sound power level	max. 35 dB (A) normal operation, max 50 dB (A) in boost mode and manual override, adaptation/ Synchronization
Angle of rotation	95° , adjustable mechanical
Spindle holder	– Spindle clamp, spindle round 10 ... 20 mm / spindle square 8 ... 16 mm
	– Form fit in OEM variant versions, e.g. 8 x 8 mm
NFC Communication	Yes
Connection	Pluggable terminals 0.5mm2 to 2.5 mm2 (20AWG to 14 AWG), 0.33 mm2 (22AWG) with bullet terminal or cable lug
Differential pressure sensor	
Type, principle of operation	Belimo D3 sensor, dynamic response
Operating range	–20 ··· 500 Pa
Accuracy	–20Pa to 20Pa (± 1Pa), 20Pa to 500Pa (± 5% of measured value)
Overload capability	± 3000 Pa
Measuring air conditions	0...+50℃ / 5...95% rH, non–condensating
Installation position	Any, no reset necessary
Materials in contact with medium	Glass, epoxy resin, PA, TPE
Operation and servicing	Actautor and Room Unit NFC interface for Android Smartphone ZoneEase VAV App
Push–button	Adaption
LED display	Display Power, Status and Communication
Room Unit Wall / Room Unit Ceiling	
Operation Mode	Active, Off, Eco, Boost, Anti–frost (built–in, self triggered), Occupancy (triggered by external occupancy sensor if available)#
Color	White
LCD Display	Backlight (White)&
Setpoint range	10···30℃ (High/low limit configurable)
Sensing element accuracy	+/–0.3℃ at 15...30℃
Display resolution	+/–0.5℃
NFC Communication	Yes
Wiring terminals	toolless push–in terminal, 0.5mm2 to 1.5 mm2 (20 AWG to 16 AWG)
Power supply for external device	10W, such as presence detector
Datapoint list (BACnet, APP, Cloud)	Refers to Datapoint list document

Connection

Connecting terminals

The connection is made using the pluggable terminals to the ZoneEase VAV device.

LMV–BAC–001 TGB

Designatio		Function
	D+	BACnet +
	D–	BACnet –
	⊥	– } AC 24V supply
	~	+ } AC 24V supply
◄	S	CO2 input
	MP	–MP–Bus connection
►	1	Digital Output 1
►	2	Digital Output 2
►	3	Digital Output 3
	COM	Digital Output Common

Note
- Supply via safety isolating transformer!
- Connections 1 and 2 (AC 24V) and 5 (MP signal) must be routed to accessible terminals (ZoneEase Wall Unit, 22RT–A001 or ZoneEase Ceiling Unit, 22RT–A002 or 22RTA003) for temperature sensing in order to enable access with the tool for diagnostic and service work.

LMV–BAC–002 TGB

Digital Output connection

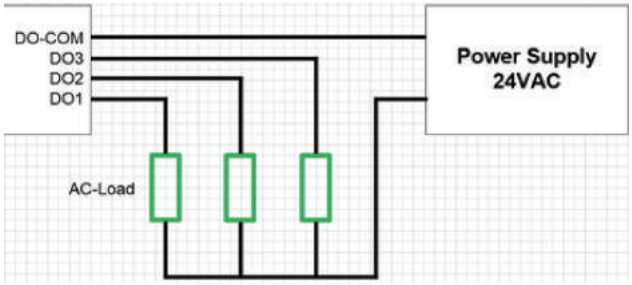

BACnet MS/TP BACnet STP cable (22 AWG, 0.33 mm^2) and EOL termination as according to BACnet

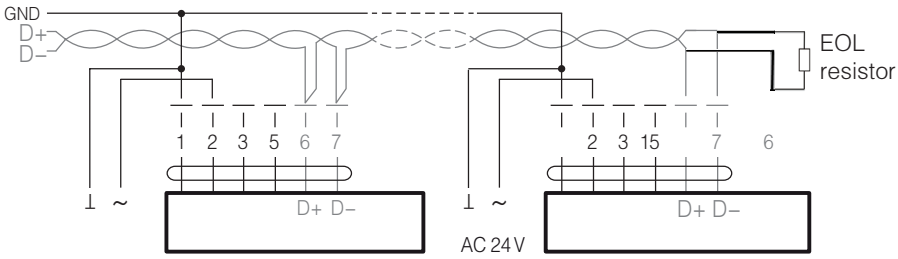

Dimensioning of supply and connecting cable

General

In addition to the actual wire sizing, attention must also be paid to the surrounding area and the cable routing.Signal cables must not be laid in the vicinity of load cables, objects liable to cause EMC interference etc. If possible, Shielded Paired or Shielded layer stranded cables improve immunity to interference, refers to BACnet Standard and recommendations.

24 V supply, dimensioning and cabling

The dimensioning and installation of the AC 24V supply, the fuse protection and the cables are dependent on the total operated load and local regulations. Account must be taken of the following performance data, including the starting currents of the actuators:
- Other devices which are intended to be connected to the same 24 V supply
- Reserve capacity for subsequent expansion, if planned.

Tool connection

Settings and diagnostics

For Portable Testing and Commisioning of the VAV unit, the ZoneEase VAV can be operated via the integrated NFC interface using the Smartphone (Android / iOS?).

Belimo Cloud Business Application

Belimo Cloud Business Application support workforce efficiency improvement by creating a working platform for OEMs, SIs, Project Managers, Consultants and Building Owners to prepare, configure, calibrate, manage, review and maintain VAV system throughout the product lifecycle.

Smartphone – Belimo Assistant App

NFC–capable devices
– LMV–BAC–001, LMV–BAC–002, 22RTA001, 22RTA002, with NFC mark

The NFC antenna range of the ZoneEase VAV is located between Belimo or the OEM logo and the NFC mark.
Align NFC–capable Android Smartphone, with Assistant App loaded, in such a way on the ZoneEase VAV that the two NFC antennas are above one another.

The Belimo Assistant App can be downloaded via the Google Play Store (www.google.xx).

Depending on the model of the Smartphones, its antenna could be located at a different position (see documentation for the Smartphone).

On–board service connection

The service connection integrated in the ZoneEase VAV enables rapid connection of the operating devices ZTH.. and PC–Tool.
For the PC–Tool connection, the PC is connected per USB cable with the level converter ZTH EU or ZIP–USB–MP.

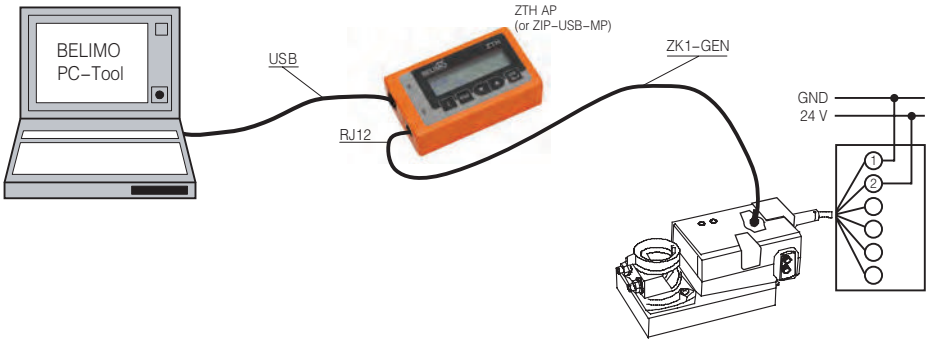

MP connection (5)

The VAV–Compacts can also communicate with the Service tools via the MP connection (connection wire 5). The connection be set up during operations on–site, i.e. in the connection socket, on the tool socket of the Belimo room temperature controller CR24 or at the tier or control cabinet terminals.

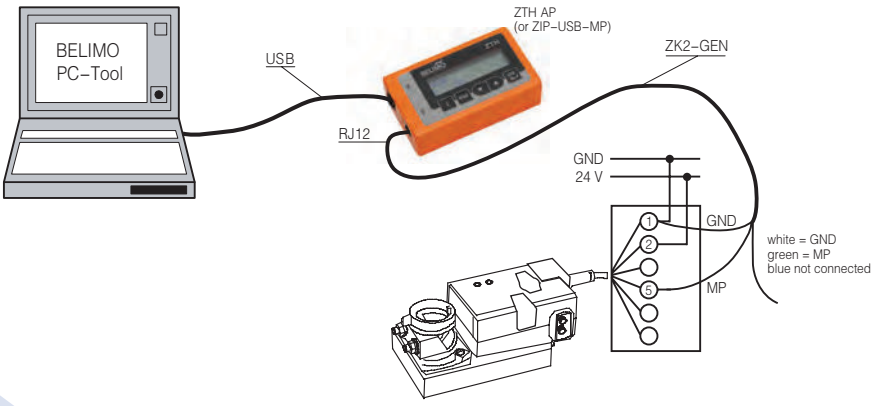

Technical data sheet CQ24A

Rotary actuator for zone valves

- Nominal voltage AC/DC 24 V
- Control Open–close, 3–point
- Snap–assembly
- Flow setting variable

Technical data

Electrical data	Nominal voltage	AC/DC 24 V
	Nominal voltage frequency	50/60 Hz
	Nominal voltage range	AC 19.2...28.8 V / DC 21.6...28.8 V
	Power consumption in operation	0.3 W
	Power consumption in rest position	0.15 W
	Power consumption for wire sizing	0.6 VA
	Connection supply / control Cable	1 m, 3 x 0.75 mm^2
	Parallel operation	Yes (note the performance data)
Functional data	Torque motor	1 Nm
	Manual override	with actuator (clicked out) adjustable
	Actuating time	75 s / 90°
	Sound power level motor	35 dB(A)
	Position indication	Yes
	Flow setting	see product features
Safety	Protection class IEC/EN	III Safety extra–low voltage
	Degree of protection IEC/EN	IP40
	EMC	CE according to 2004/108/EC
	Certification	IEC/EN IEC/EN 60730–1 and IEC/EN 60730–2–14
	Mode of operation	Type 1
	Rated impulse voltage supply / control	0.8 kV
	Control pollution degree	2
	Ambient temperature	5...40℃
	Non–operating temperature	–7...50℃
	Medium temperature	2...90℃ (with valve)
	Ambient humidity	95% r.h., non–condensing
	Maintenance	Maintenance–free
Weight	Weight approx. 0.21 kg	

Electrical installation

AC/DC 24 V, open–close

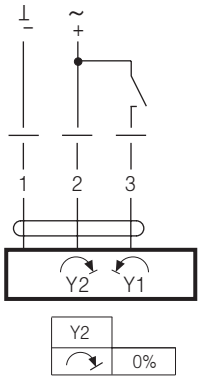

Cable colours:
1 = black
2 = red
3 = white

AC/DC 24 V, 3–point

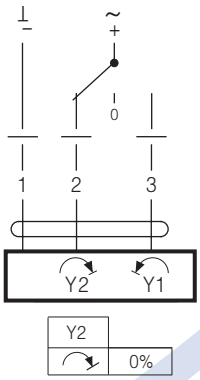

Cable colours:
1 = black
2 = red
3 = white

LCD Room Unit for ZoneEase Cloud VAV Controller Actuator

- NFC interface for Smartphone Commissioning
- Workforce Efficiency Improvement with Cloud operation
- On/Off/Eco/Boost modes
- With additional switch–on option for occupancy contact
- Summer/Winter/CAV modes

22RT–A001

Brief description

Application The Room Unit provide on/off control, change of modes, temperature setpoint. It displays room temperature reading / temperature setpoint and various status such as modes.
It serves as an NFC interface to provide prompt access of data at an accessible level.

Technical Data

Supply	
Nominal voltage	AC 24V, 50/60 Hz
Operating range	AC 19.2 ... 28.8 V
Power Consumption	1W max without occupancy device. 10W max to power occupancy device
Operating Temperature/Humidity	0...50℃ / 5% tp 95% non–condensing
Storage Temperature	0...60℃
Sensing element accuracy	+/–0.3 ℃ at 15...30℃
Operation Mode	On, Off, Eco, Boost, Anti–frost (built–in, self triggered), Occupancy (triggered by external occupancy sensor if available), Winter/Summer Mode (APP/BACnet triggered), CAV mode(APP/BACnet triggered)
Display resolution	+/–0.5 ℃ , 0...50℃ (Display Reading/Setpoint)
Wiring terminals	6x 0.5–1.5mm sq. diameter cable
Safety	
Protection class	III Safety extra–low voltage
Degree of protection	IP20
EMC	CE according to 89/336/EEC, EN60730–1:2000 + A2:2008, EN60730–2–14:1997 + A2:2008 EN61000–6–2:05 and EN61000–6–3:07 + A1:11, EN60730–2–9:2010
Mode of operation	Type 1 (in acc. with EN 60730–1)
Rated impulse voltage	0.8 kV (in accordance with EN 60730–1)
Control pollution degree	2 (in accordance with EN 60730–1)
Dimension (W x H X D)	85.4 x 84.4 x 15

TBVAV SERIES FOR VAV SYSTEMS

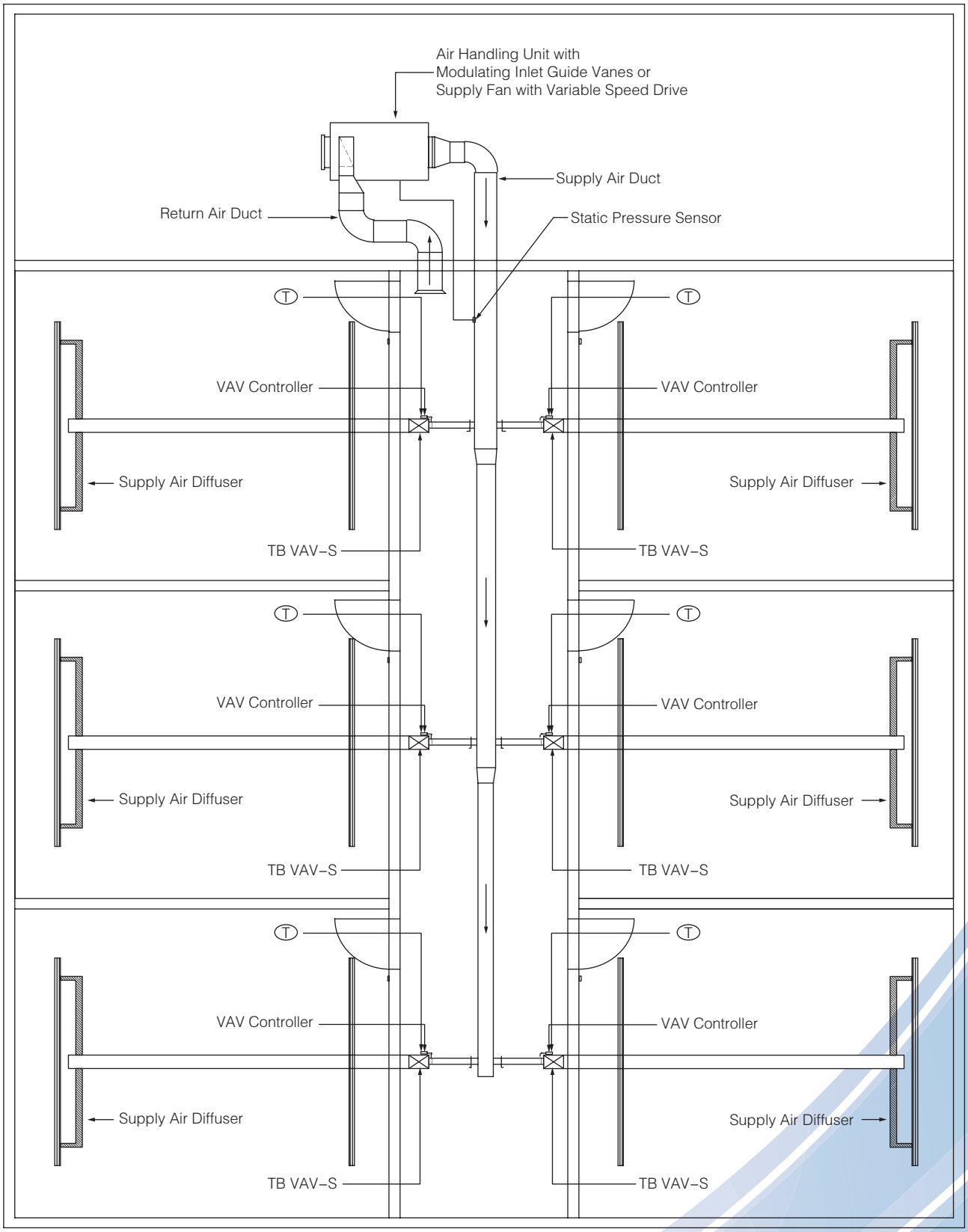

TBVAV–FPP–T200

TBVAV–S–T100

TBVAV–SVD

TBVAV–S–T100–1

AIRMAX

EXPERT OF VENTILATION SOLUTION

SALES CONTACT

www.airmax-hvac.com

080-614-4944, 063-268-8080

@airmax (Line Official)

windcontrol.info@gmail.com

Address

เลขที่ 56/392 หมู่ที่ 12
ตำบลศีรษะจรเข้น้อย
อำเภอบางเสาธง
จังหวัดสมุทรปราการ
10540